Diritti riservati All rights reserved

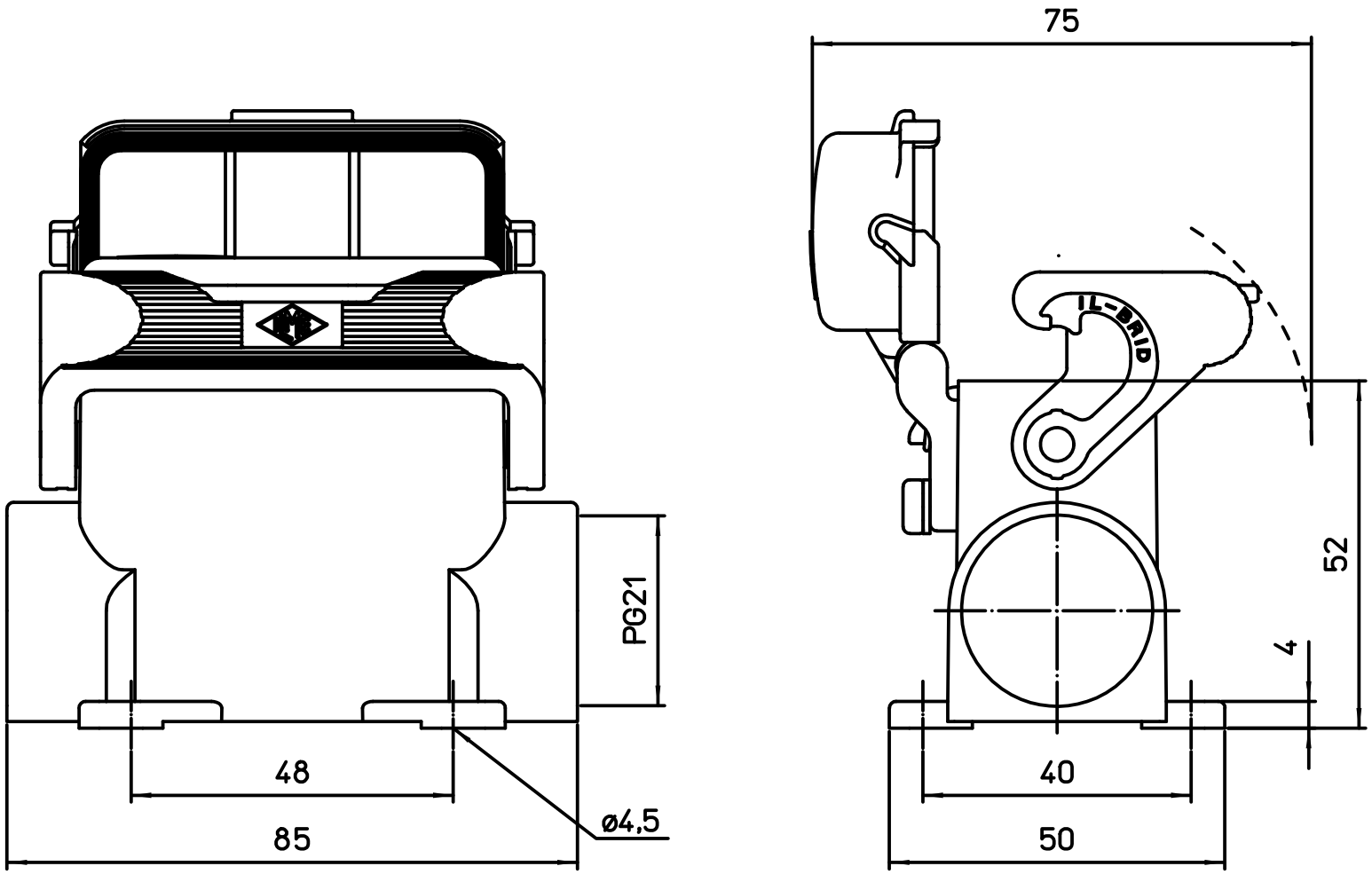

dimensions in mm	CZP 15 LSP21	Scale
Date 21/03/19	Surface mounting housings with 1L and cover, PG21 - SIMPLEX	1:1
Sign. Pitasi		